1647
1646
1645
1644
1644/3
1644/2
6
3
5
4

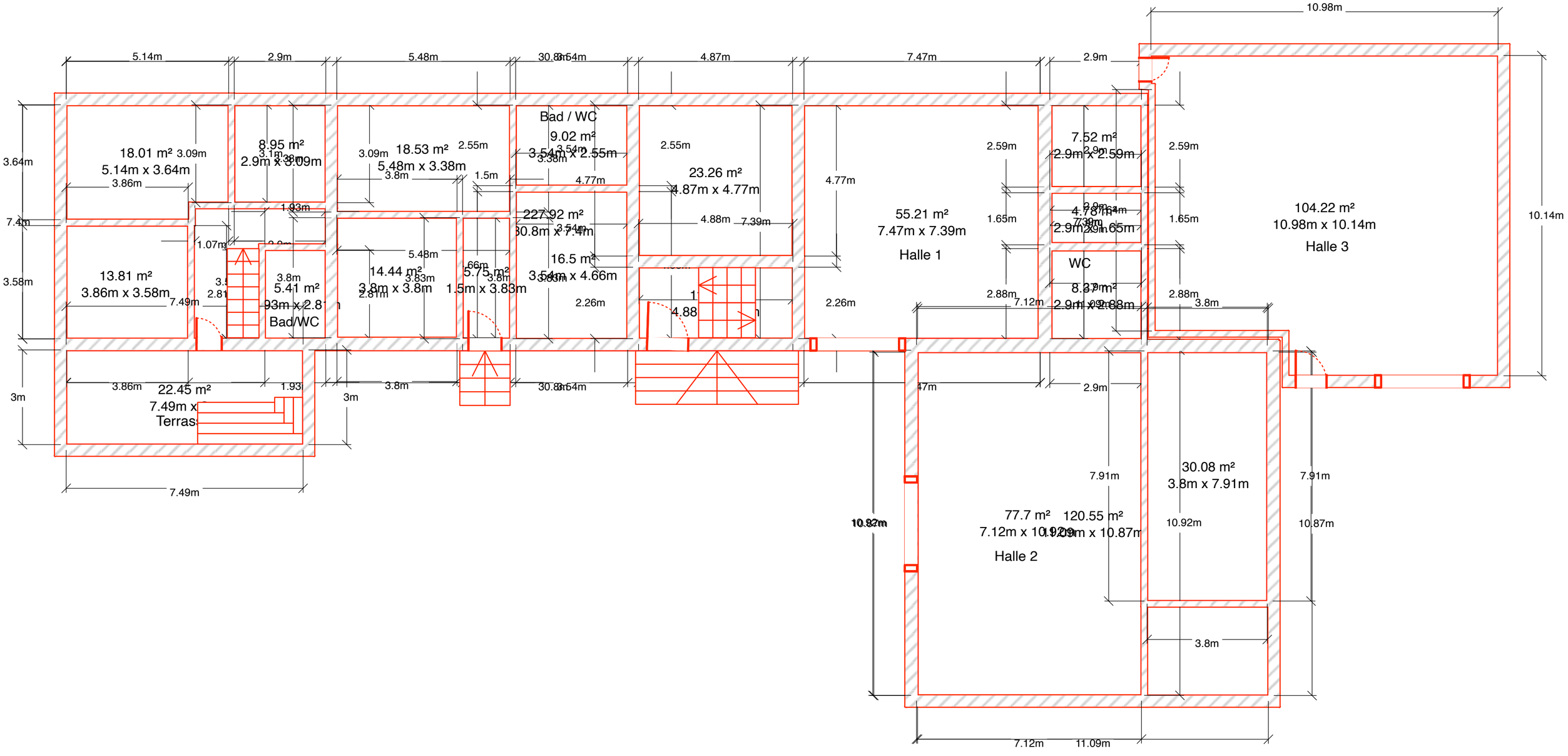
18.01 m²
5.14m x 3.64m
8.95 m²
2.9m x 3.09m
18.53 m²
5.48m x 3.38m
Bad / WC
9.02 m²
3.54m x 2.55m
23.26 m²
4.87m x 4.77m
7.52 m²
2.9m x 2.59m
55.21 m²
7.47m x 7.39m
Halle 1
104.22 m²
10.98m x 10.14m
Halle 3
13.81 m²
3.86m x 3.58m
5.41 m²
Bad/WC
14.44 m²
3.8m x 3.8m
5.75 m²
1.5m x 3.83m
16.5 m²
3.54m x 4.66m
WC
22.45 m²
7.49m x
Terras
77.7 m²
7.12m x 10.92m
120.55 m²
11.09m x 10.87m
Halle 2
30.08 m²
3.8m x 7.91m

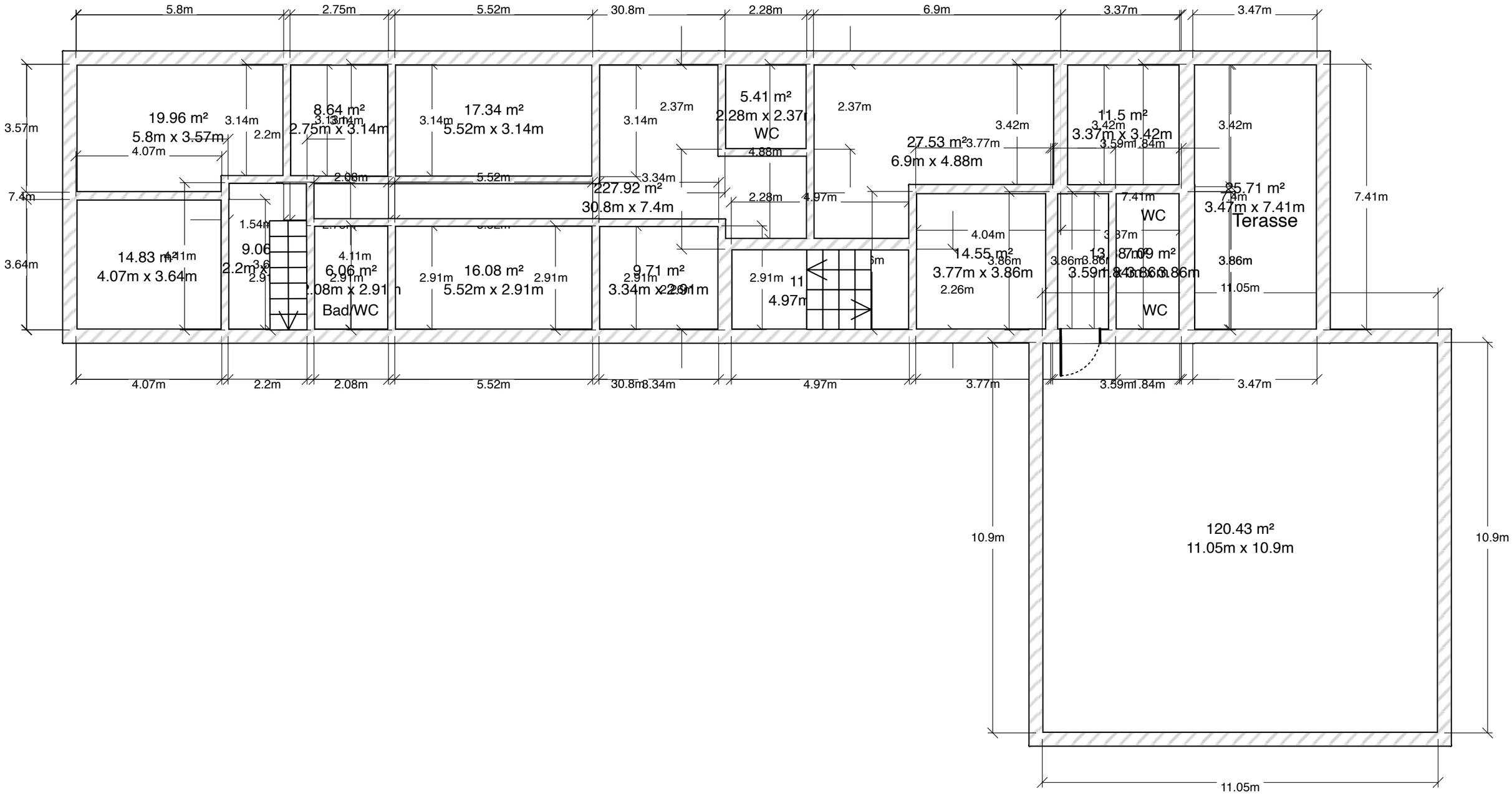
19.96 m²
5.8m x 3.57m
8.64 m²
2.75m x 3.14m
17.34 m²
5.52m x 3.14m
5.41 m²
2.28m x 2.37m
WC
27.53 m²
6.9m x 4.88m
11.5 m²
3.37m x 3.42m
227.92 m²
30.8m x 7.4m
25.71 m²
3.47m x 7.41m
Terasse
14.83 m²
4.07m x 3.64m
9.06
2.2m
6.06 m²
2.08m x 2.91m
Bad/WC
16.08 m²
5.52m x 2.91m
9.71 m²
3.34m x 2.91m
14.55 m²
3.77m x 3.86m
WC
WC
120.43 m²
11.05m x 10.9m
10.9m
11.05m

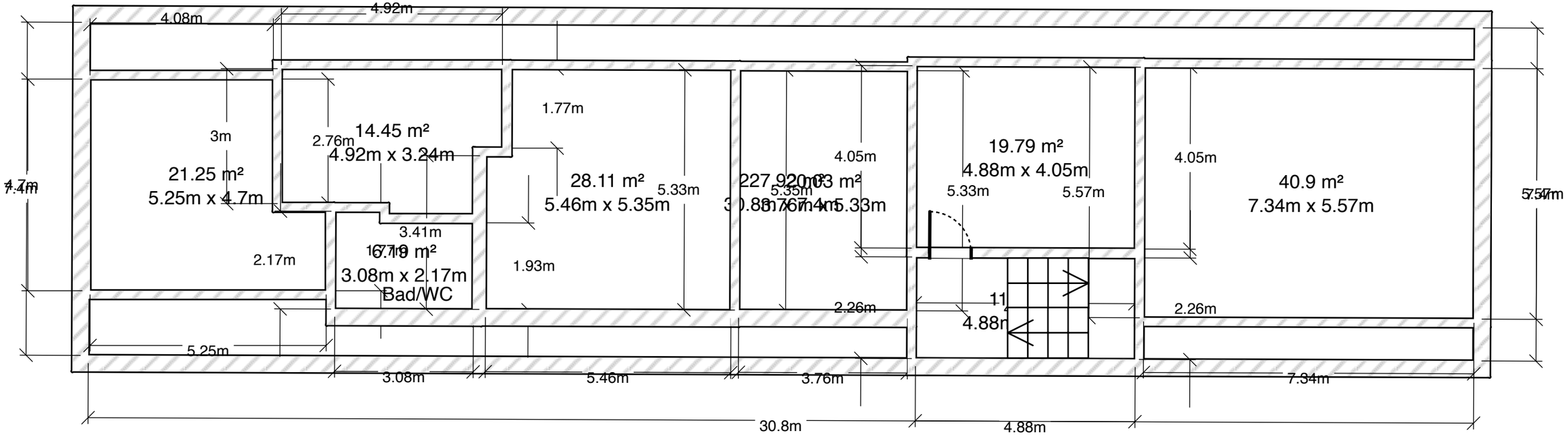
4.08m
4.92m
3m
2.76m
14.45 m²
4.92m x 3.24m
21.25 m²
5.25m x 4.7m
4.7m
7.4m
2.17m
3.41m
6.79 m²
3.08m x 2.17m
Bad/WC
1.77m
28.11 m²
5.46m x 5.35m
5.33m
1.93m
4.05m
5.35m
2.26m
19.79 m²
4.88m x 4.05m
5.33m
5.57m
4.05m
40.9 m²
7.34m x 5.57m
5.57m
2.26m
5.25m
3.08m
5.46m
3.76m
7.34m
30.8m
4.88m